HB3 BASEBOARD FOR RMx MODULES

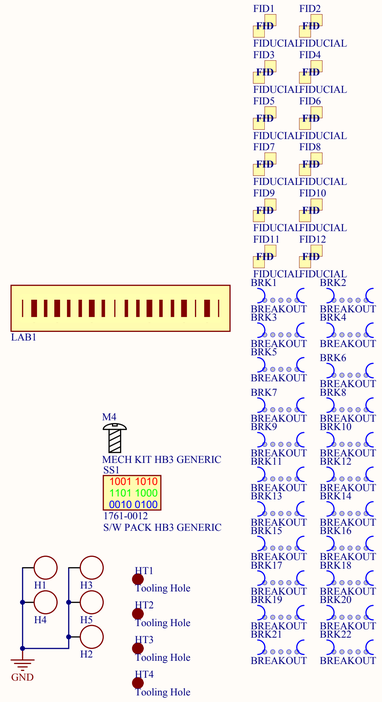

Blue Chip Technology

Design: HB3 (Host board for RMx modules)	
SheetTitle: Title Page	Drawn by: DJC
Document No: 1981-1327	Revision: 1
Date: 18/10/2013	Sheet: 1 of 14
File Name: 01 - Title.SchDoc	

Copyright Blue Chip Technology Ltd 2013

BOARD TO BOARD HEADERS FOR SoM CONNECTION

(see SoM Specification Issue 1.5)

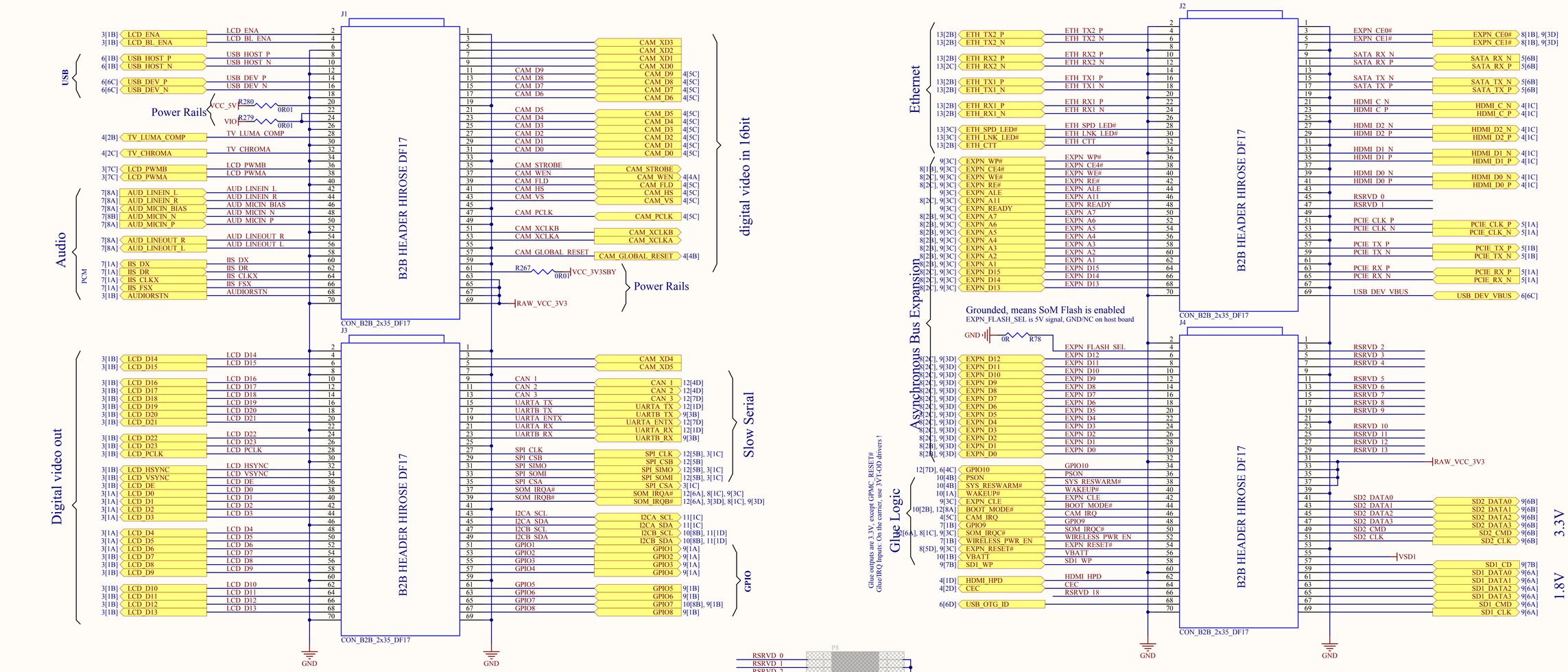

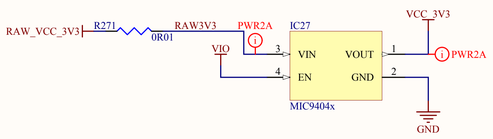

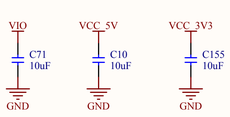

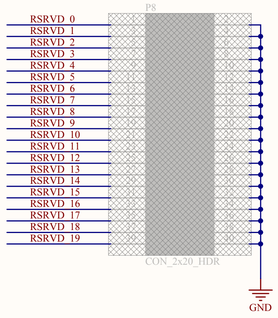

Interrupts

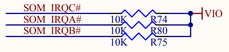

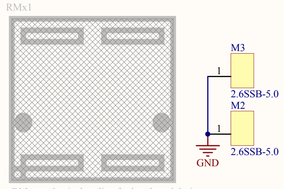

RMx mechanical outline for baseboard designs

Mechanical layer 12 on the PCB

Blue Chip Technology

Design: HB3 (Host board for RMx modules)	
SheetTitle: B2B connectors	Drawn by: DJC
Document No: 1981-1327	Revision: 1
Date: 18/10/2013	Sheet: 2 of 14
File Name: 02 - B2B Headers.SchDoc	

Copyright Blue Chip Technology Ltd 2013

Display Interfaces (1) - LCD & DVI

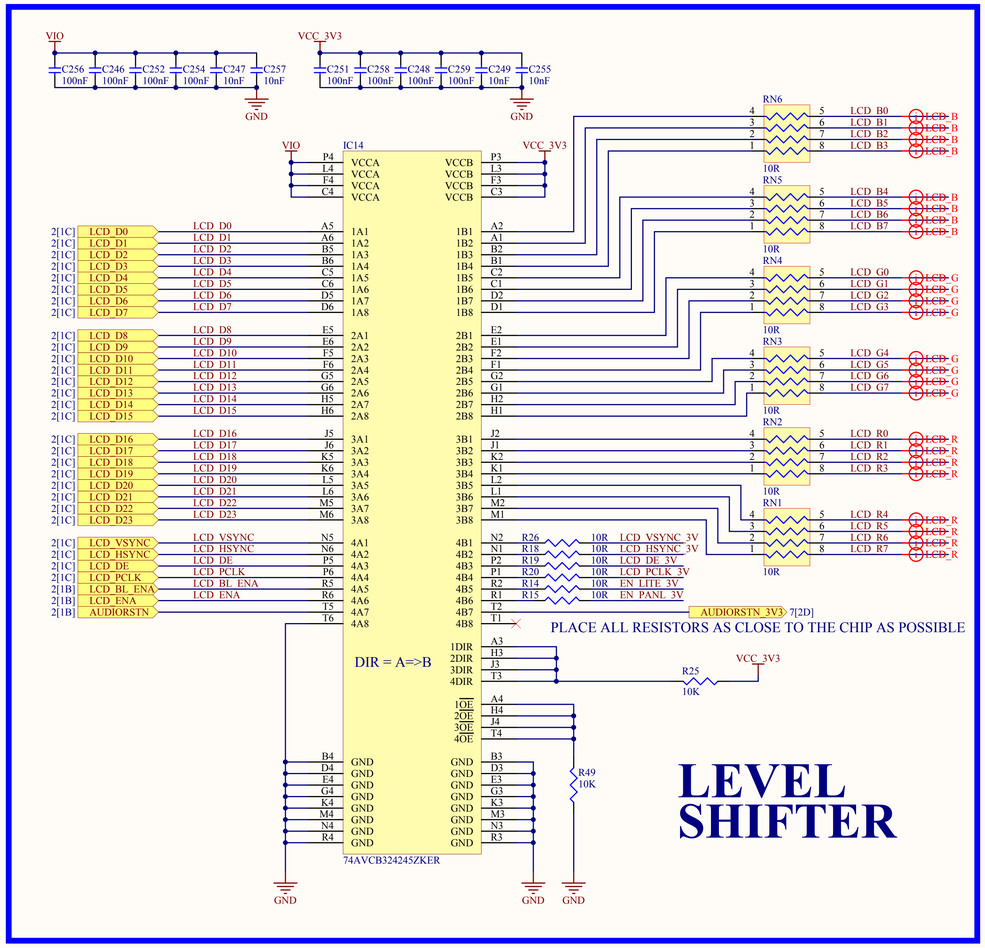

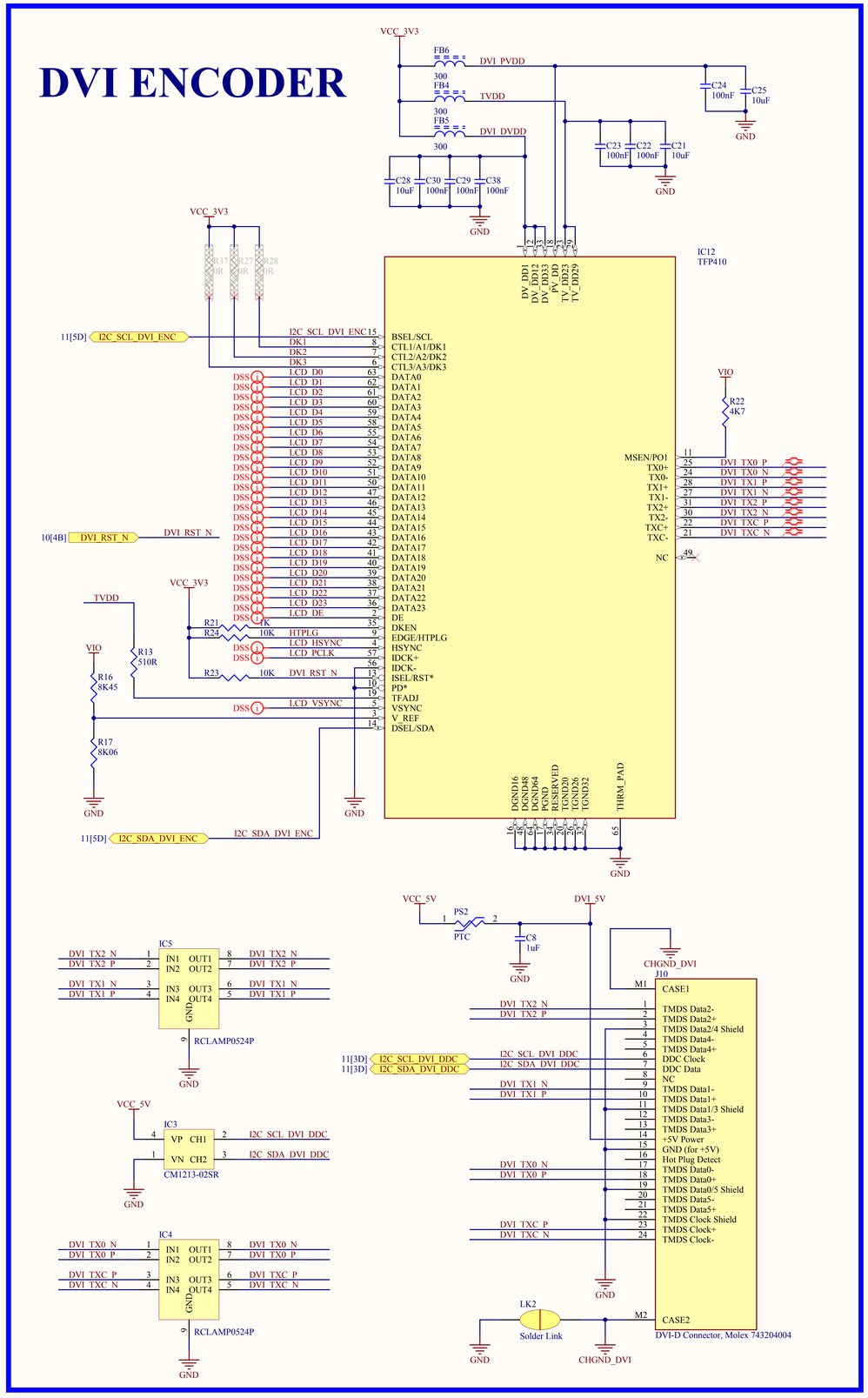

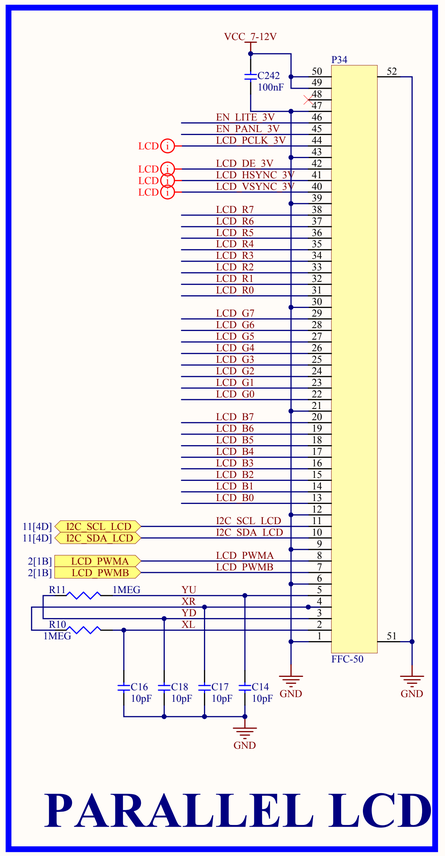

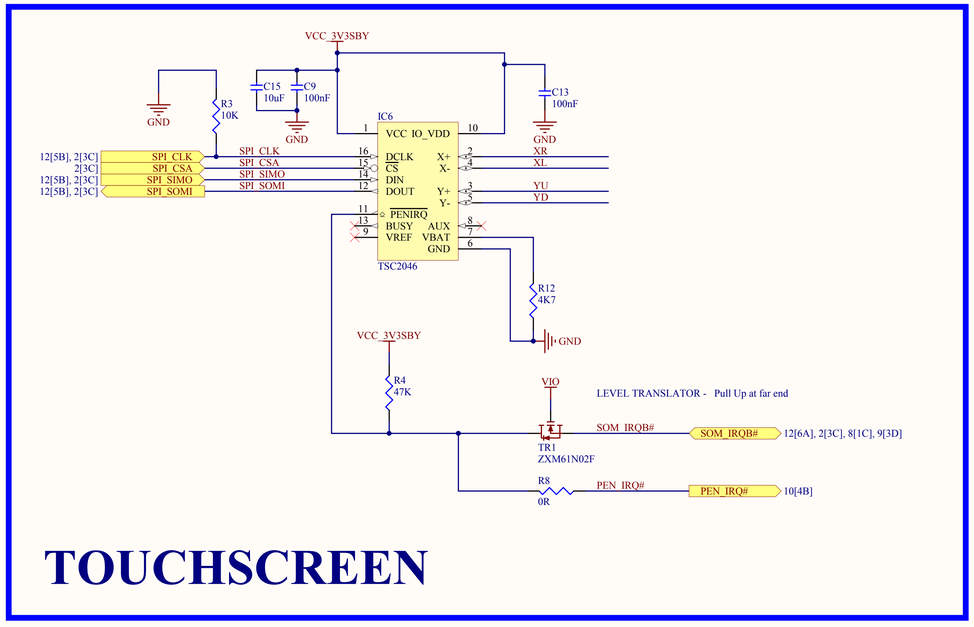

Blue Chip Technology

Design: HB3 (Host board for RMx modules)	
SheetTitle: Display (1) and TS	Drawn by: DJC
Document No: 1981-1327	Revision: 1
Date: 18/10/2013	Sheet: 3 of 14
File Name: 03 - Display Interfaces (1).SchDoc	

Copyright Blue Chip Technology Ltd 2013

Display Interfaces (2) - HDMI, Video In / Out

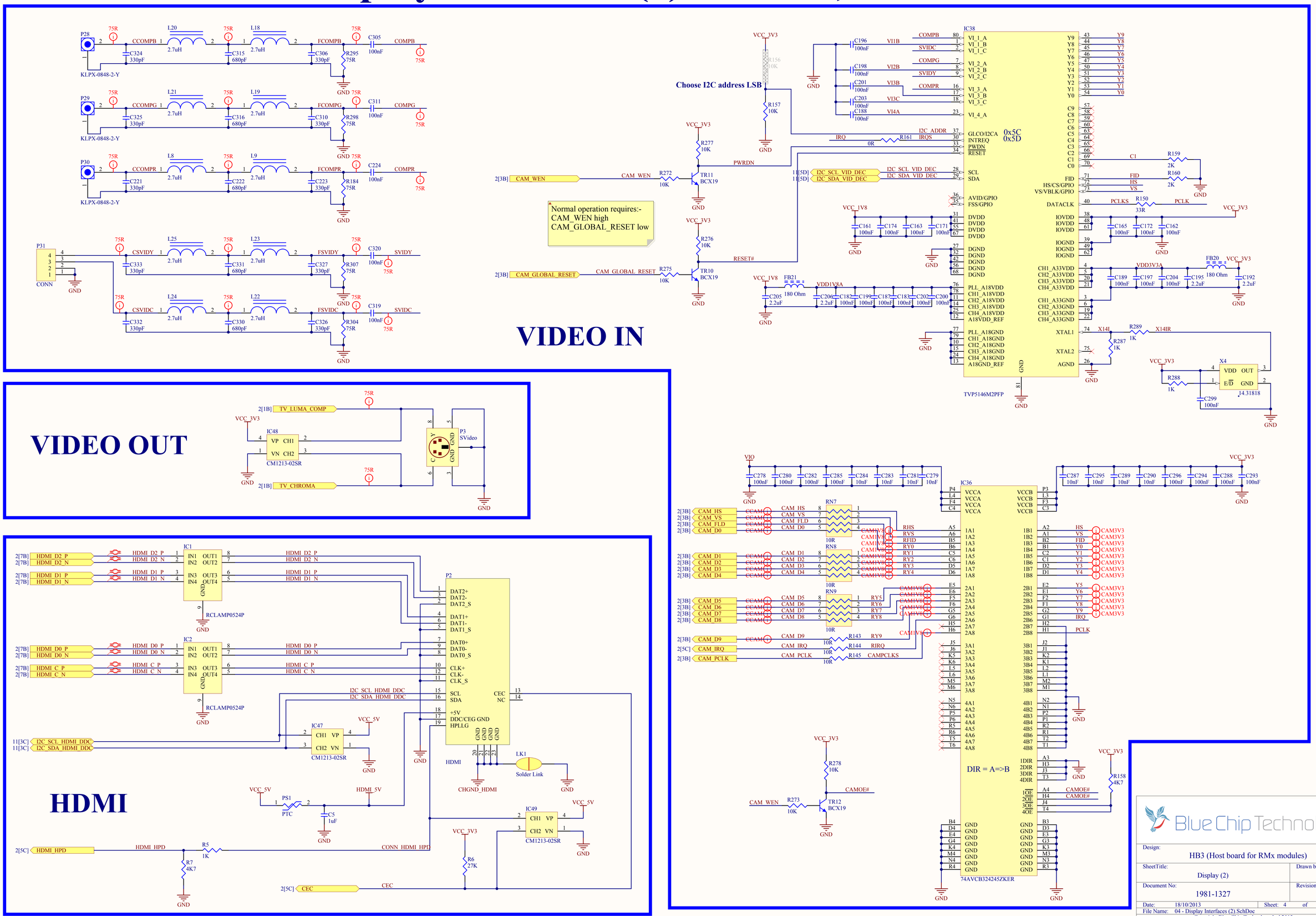

Blue Chip Technology

Design: HB3 (Host board for RMx modules)	
SheetTitle: Display (2)	Drawn by: DJC
Document No: 1981-1327	Revision: 1
Date: 18/10/2013	Sheet: 4 of 14
File Name: 04 - Display Interfaces (2).SchDoc	

Copyright Blue Chip Technology Ltd 2013

Mini PCI Express and SATA

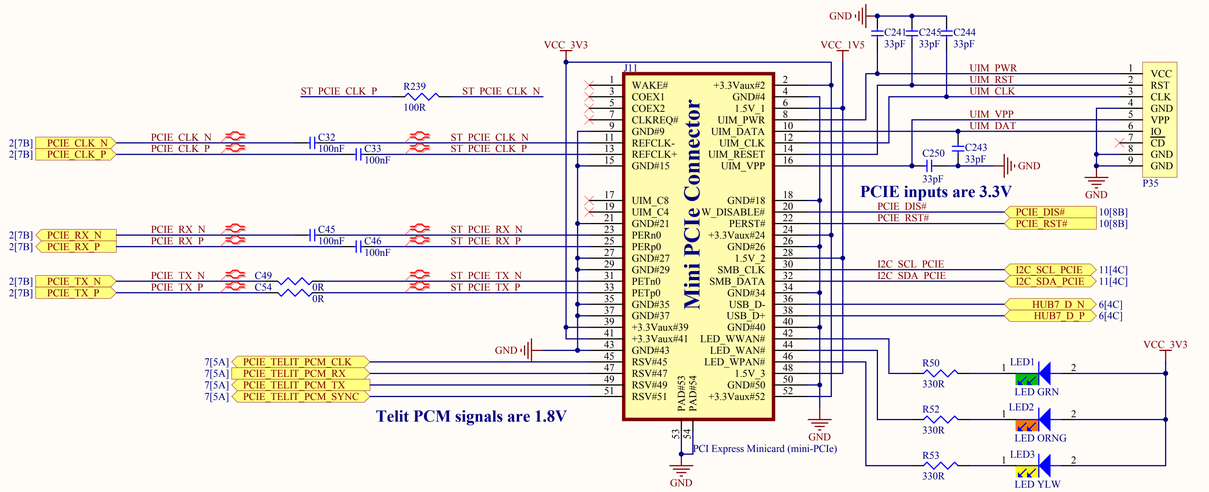

MINI PCI EXPRESS

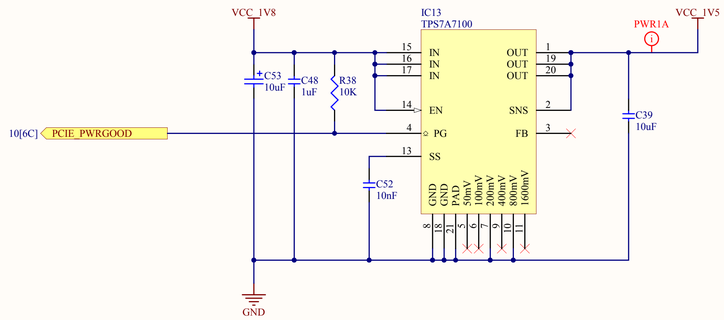

Mechanical Latch for Connector

SATA

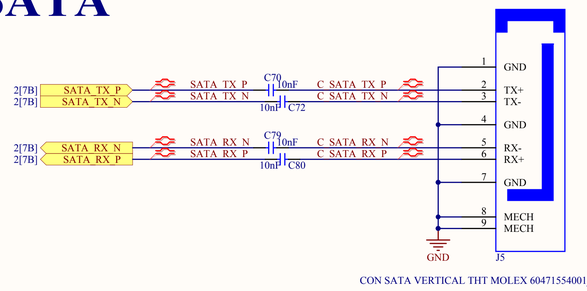

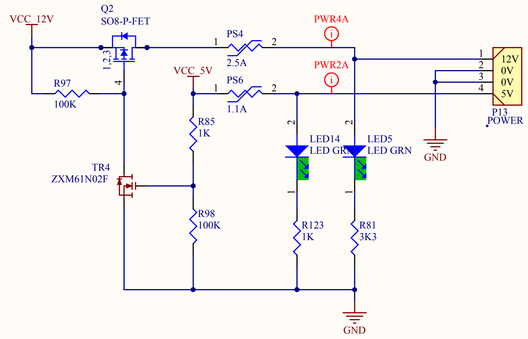

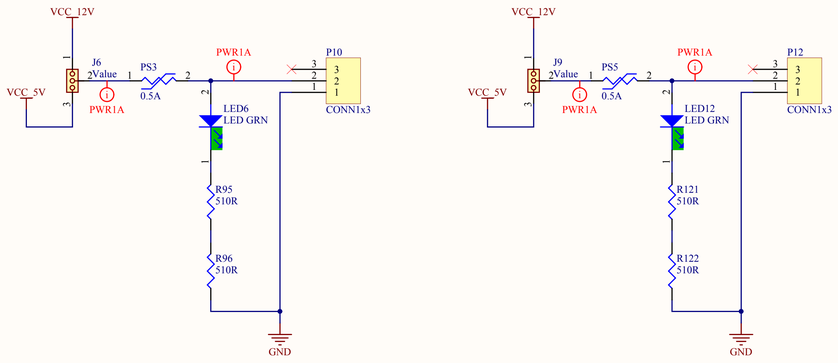

AUX POWER FEEDS

Blue Chip Technology

Design: HB3 (Host board for RMx modules)	
SheetTitle: PCI Express & SATA	Drawn by: DJC
Document No: 1981-1327	Revision: 1
Date: 18/10/2013	Sheet: 5 of 14
File Name: 05 - Mini PCI Express and SATA.SchDoc	

Copyright Blue Chip Technology Ltd 2013

USB Interfaces

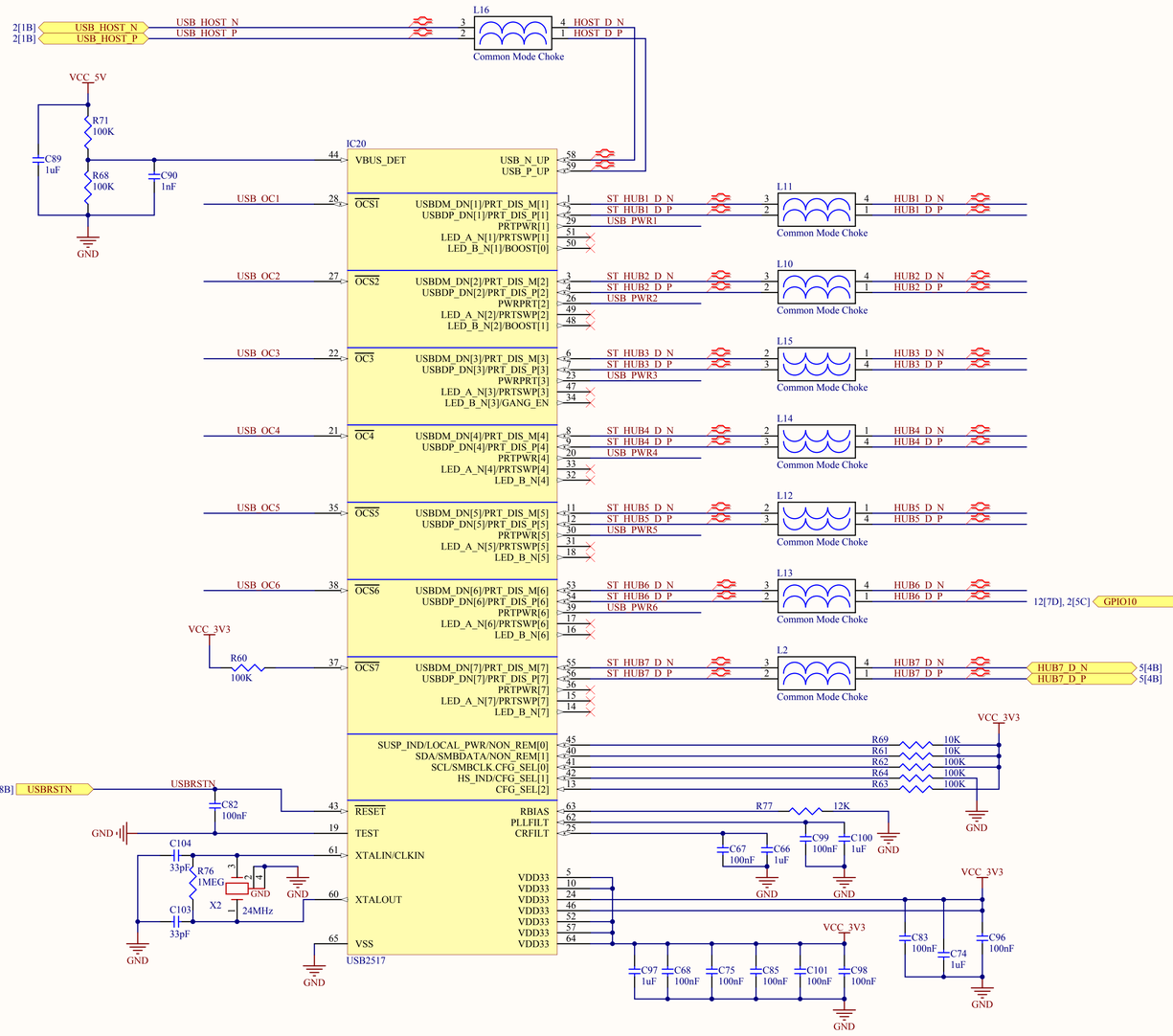

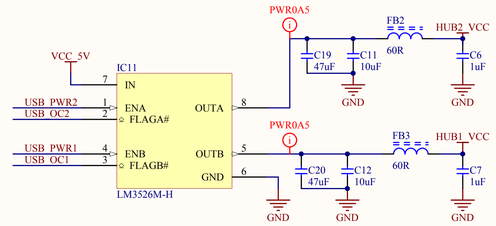

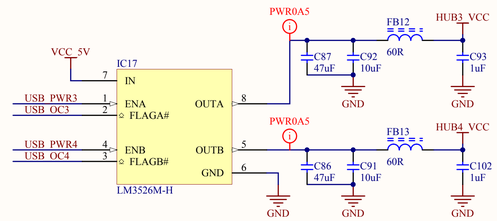

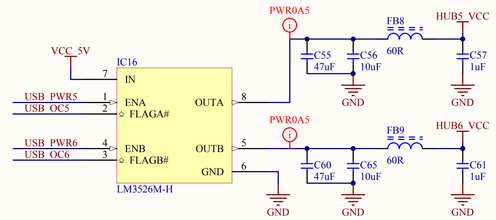

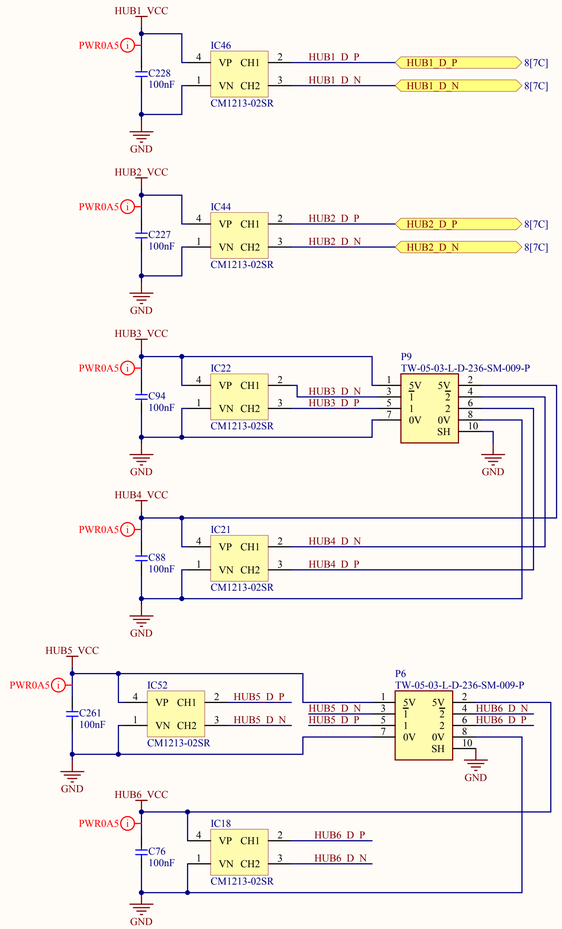

USB DEVICE PORT FROM RMx

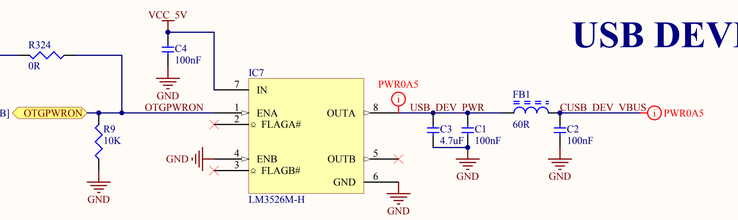

Mini-AB
Farnell Order Code: 1125347
Manufacturer Part No: MOLEX
565790519

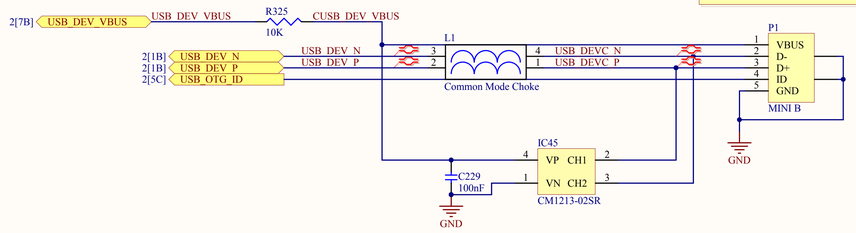

Blue Chip Technology

Design: HB3 (Host board for RMx modules)	
SheetTitle: USB	Drawn by: DJC
Document No: 1981-1327	Revision: 1
Date: 18/10/2013	Sheet: 6 of 14
File Name: 06 - USB.SchDoc	

Copyright Blue Chip Technology Ltd 2013

Audio

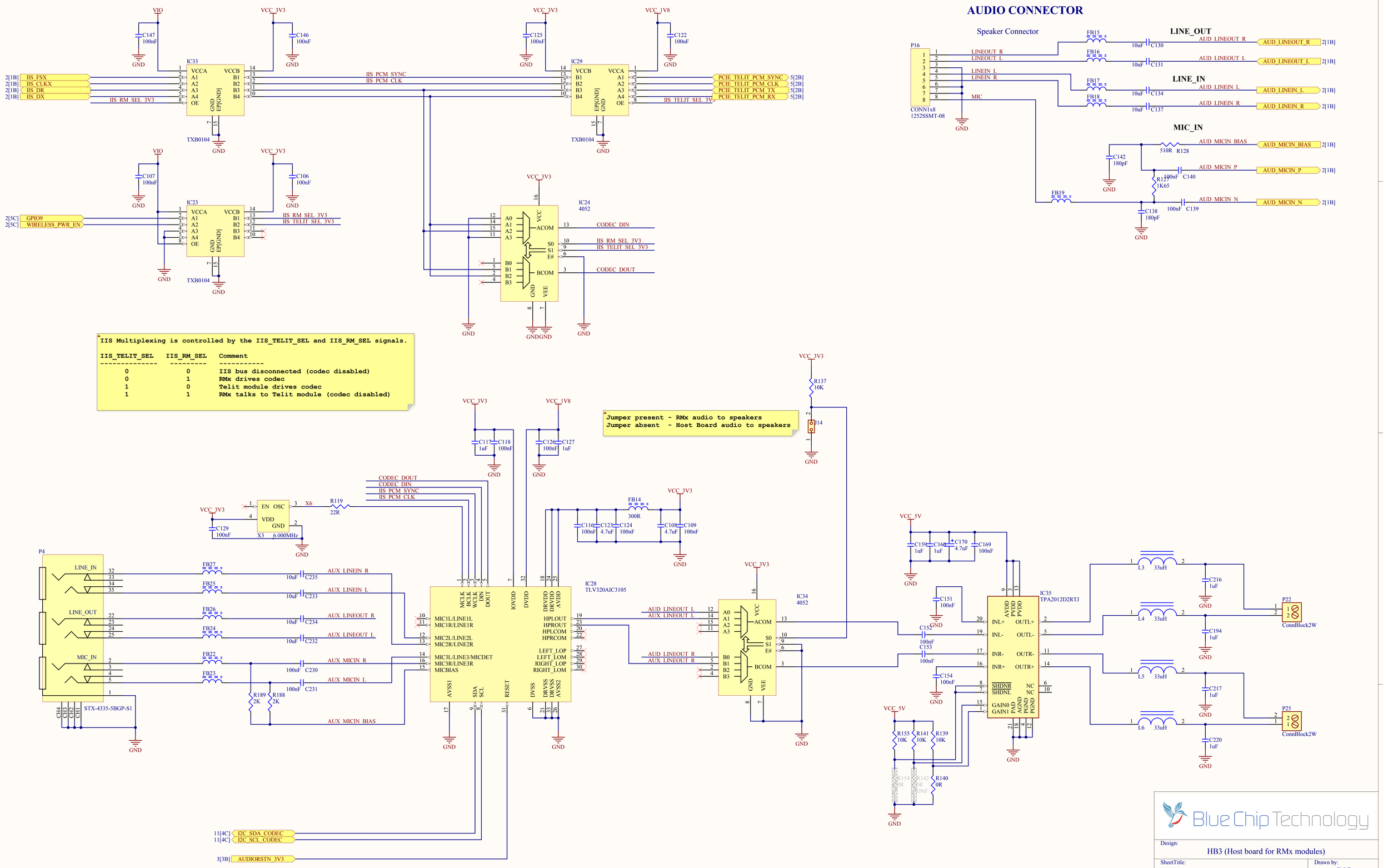
AUDIO CONNECTOR
Speaker Connector
LINE_OUT
LINE_IN
MIC_IN
P16
CONN1x8
1252SSMT-08
LINEOUT_R
LINEOUT_L
LINEIN_L
LINEIN_R
MIC
AUD_LINEOUT_R
AUD_LINEOUT_L
AUD_LINEIN_L
AUD_LINEIN_R
AUD_MICIN_BIAS
AUD_MICIN_P
AUD_MICIN_N
IC33
IC29
IC23
TXB0104
IIS_FSX
IIS_CLKX
IIS_DR
IIS_DX
IIS_RM_SEL_3V3
IIS_PCM_SYNC
IIS_PCM_CLK
PCIE_TELIT_PCM_SYNC
PCIE_TELIT_PCM_CLK
PCIE_TELIT_PCM_TX
PCIE_TELIT_PCM_RX
IIS_TELIT_SEL_3V
GPIO9
WIRELESS_PWR_EN
IC24
4052
CODEC_DIN
CODEC_DOUT
IIS Multiplexing is controlled by the IIS_TELIT_SEL and IIS_RM_SEL signals.
IIS_TELIT_SEL IIS_RM_SEL Comment
0 0 IIS bus disconnected (codec disabled)
0 1 RMx drives codec
1 0 Telit module drives codec
1 1 RMx talks to Telit module (codec disabled)
Jumper present - RMx audio to speakers
Jumper absent - Host Board audio to speakers
J14
P4
STX-4335-5BGP-S1
IC28
TLV320AIC3105
IC34
4052
IC35
TPA2012D2RTJ
P22
P25
ConnBlock2W
L3 33uH
L4 33uH
L5 33uH
L6 33uH
X6
X3 6.000MHz
EN OSC
VDD
GND
AUX_LINEIN_R
AUX_LINEIN_L
AUX_LINEOUT_R
AUX_LINEOUT_L
AUX_MICIN_R
AUX_MICIN_L
AUX_MICIN_BIAS
I2C_SDA_CODEC
I2C_SCL_CODEC
AUDIORSTN_3V3
Blue Chip Technology
Design:
HB3 (Host board for RMx modules)
SheetTitle:
Audio
Drawn by:
DJC
Document No:
1981-1327
Revision:
1
Date: 18/10/2013
Sheet: 7 of 14
File Name: 07 - Audio.SchDoc
Copyright Blue Chip Technology Ltd 2013

Fast Ethernet

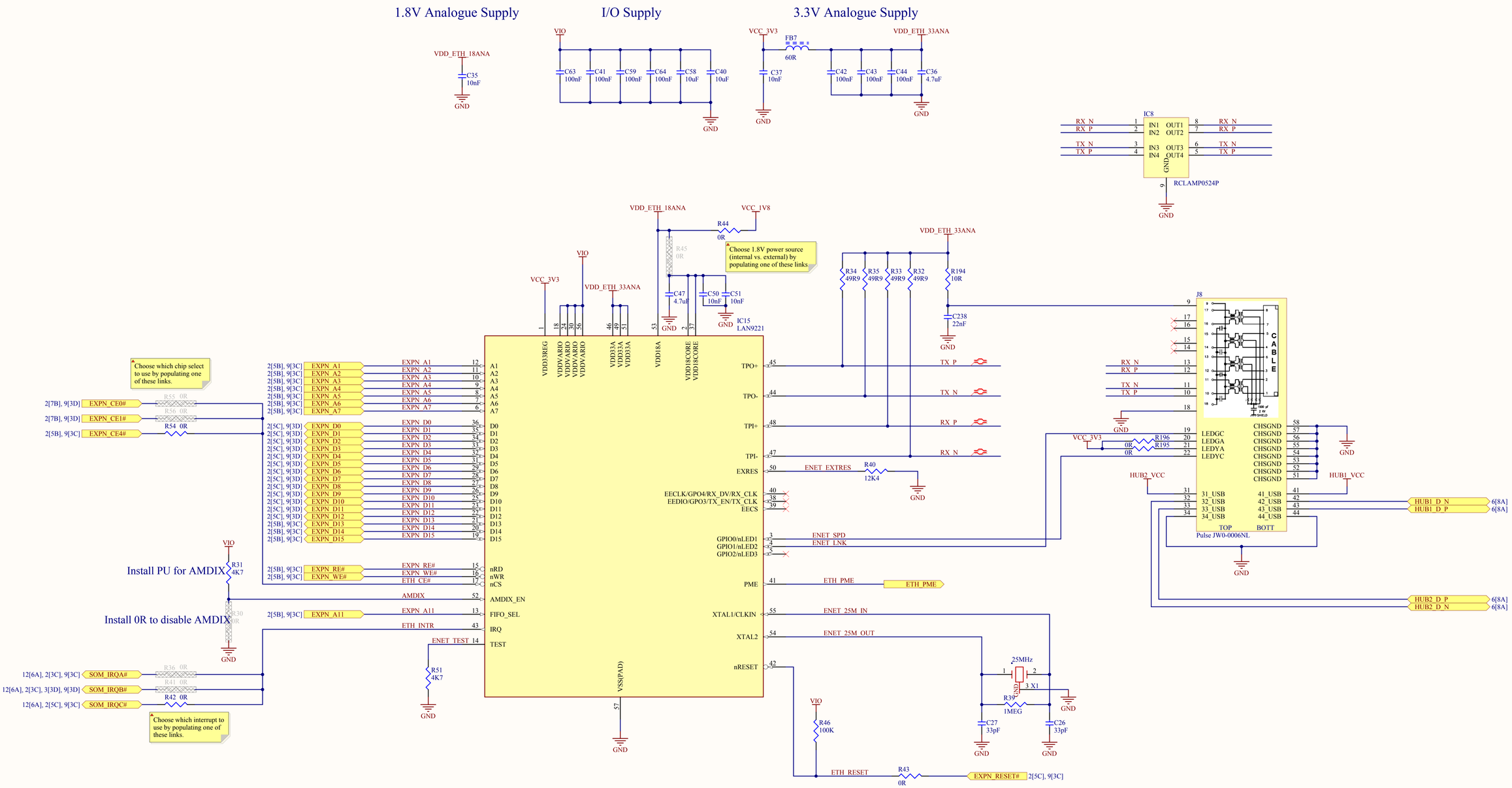

Blue Chip Technology

Design: HB3 (Host board for RMx modules)	
SheetTitle: Fast Ethernet	Drawn by: DJC
Document No: 1981-1327	Revision: 1
Date: 18/10/2013	Sheet: 8 of 14
File Name: 08 - Fast Ethernet.SchDoc	

Copyright Blue Chip Technology Ltd 2013

VARIOUS I/O INTERFACES

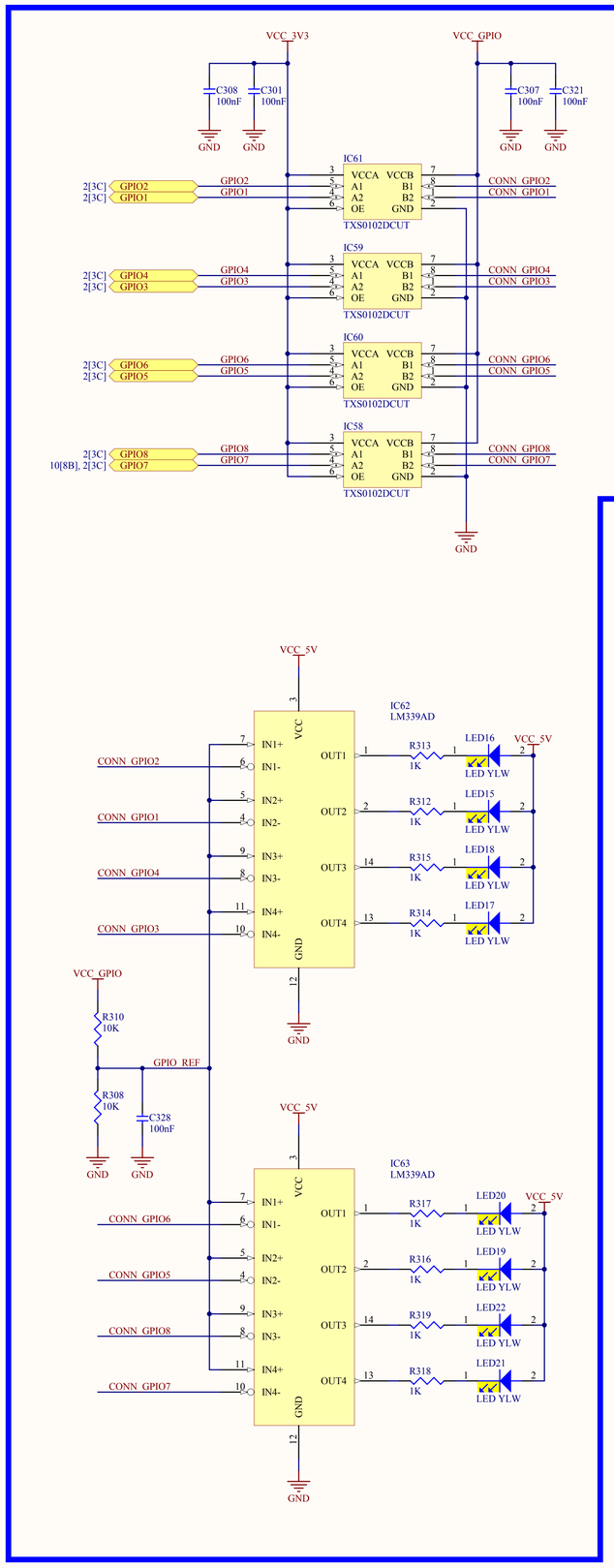

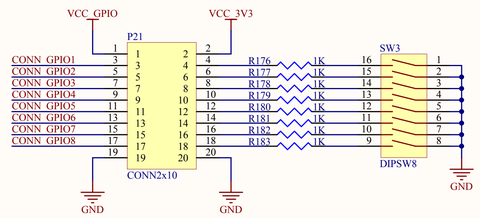

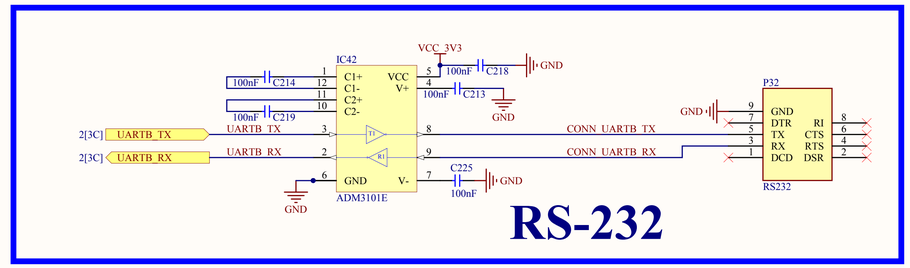

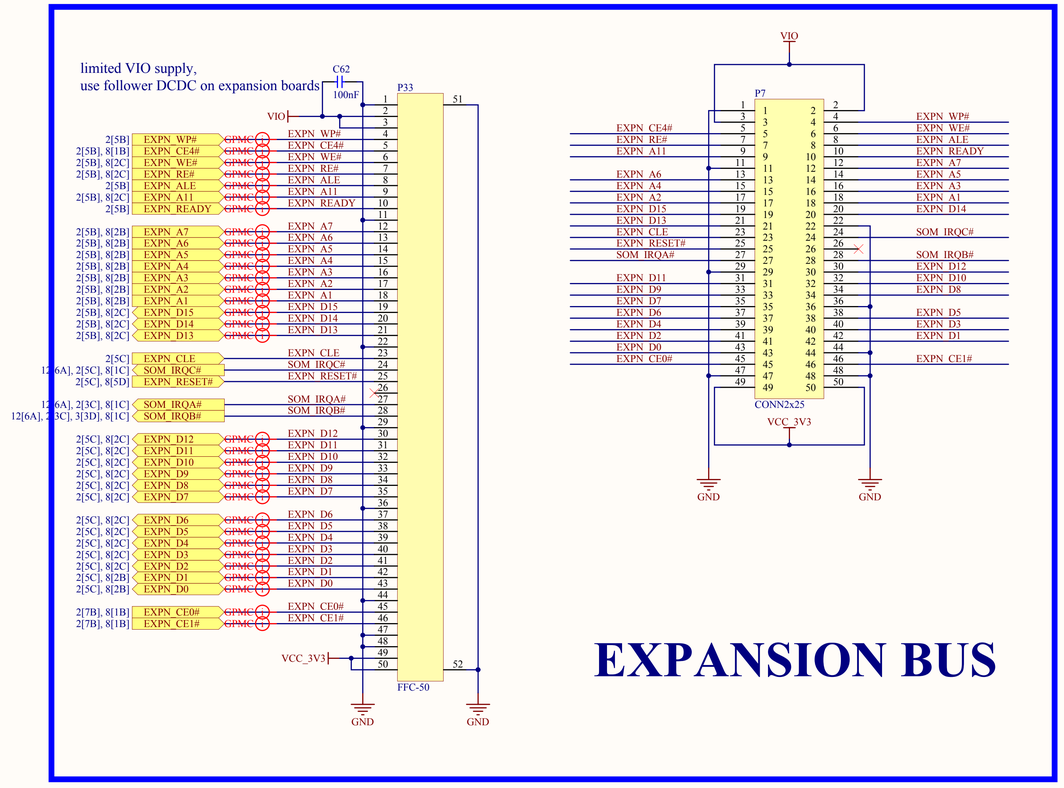

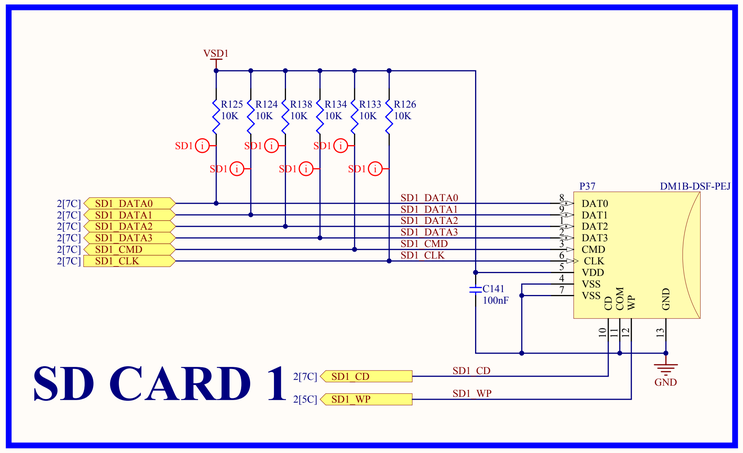

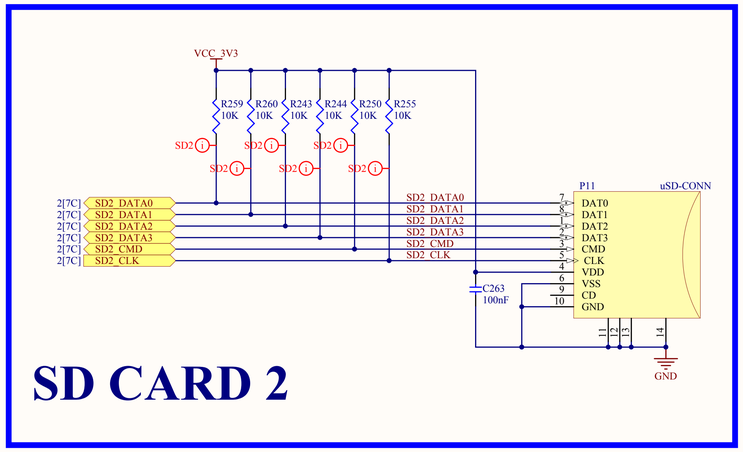

Blue Chip Technology

Design: HB3 (Host board for RMx modules)	
SheetTitle: IO	Drawn by: DJC
Document No: 1981-1327	Revision: 1
Date: 18/10/2013	Sheet: 9 of 14
File Name: 09 - IO.SchDoc	

Copyright Blue Chip Technology Ltd 2013

POWER SUPPLIES

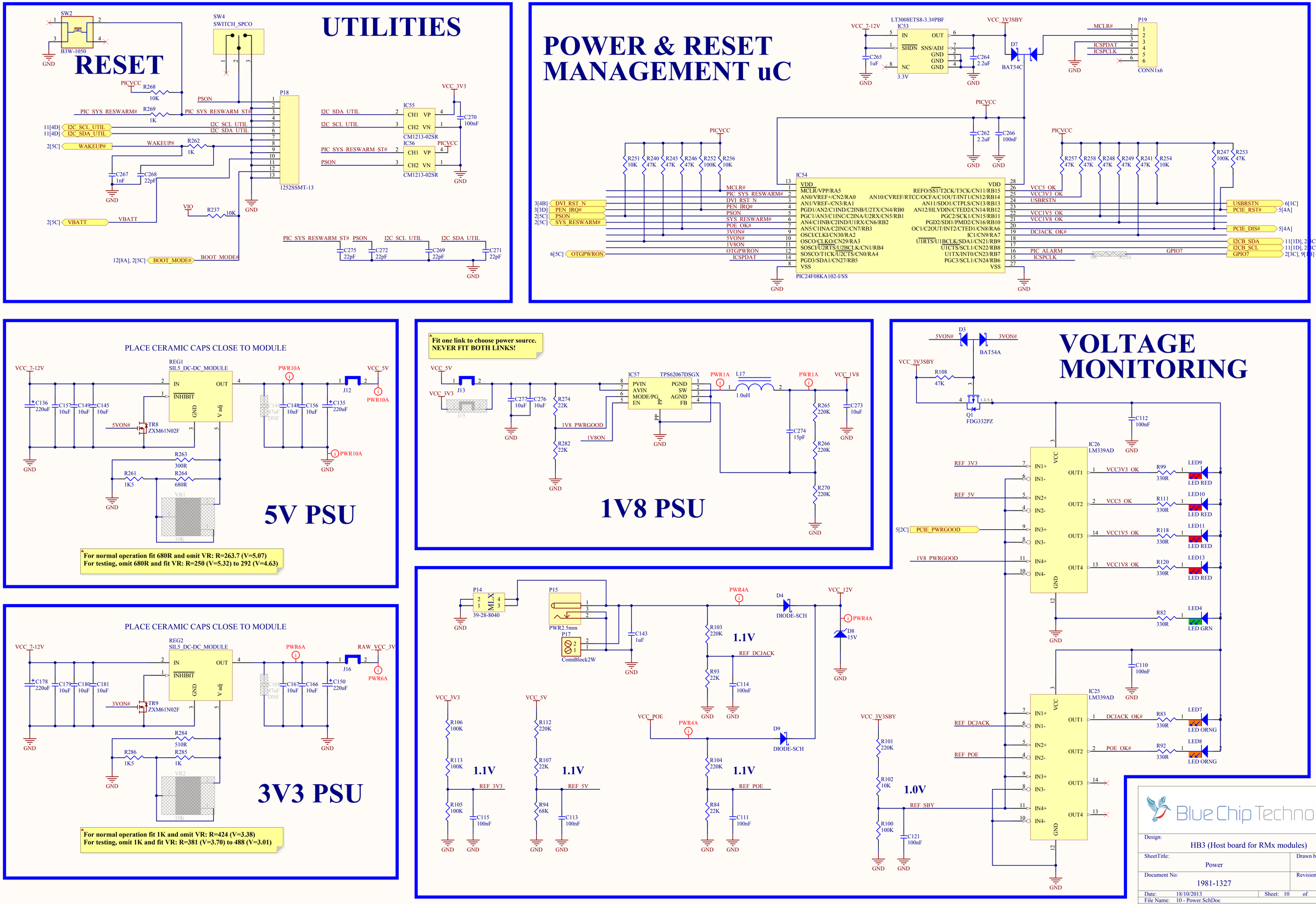

I2C

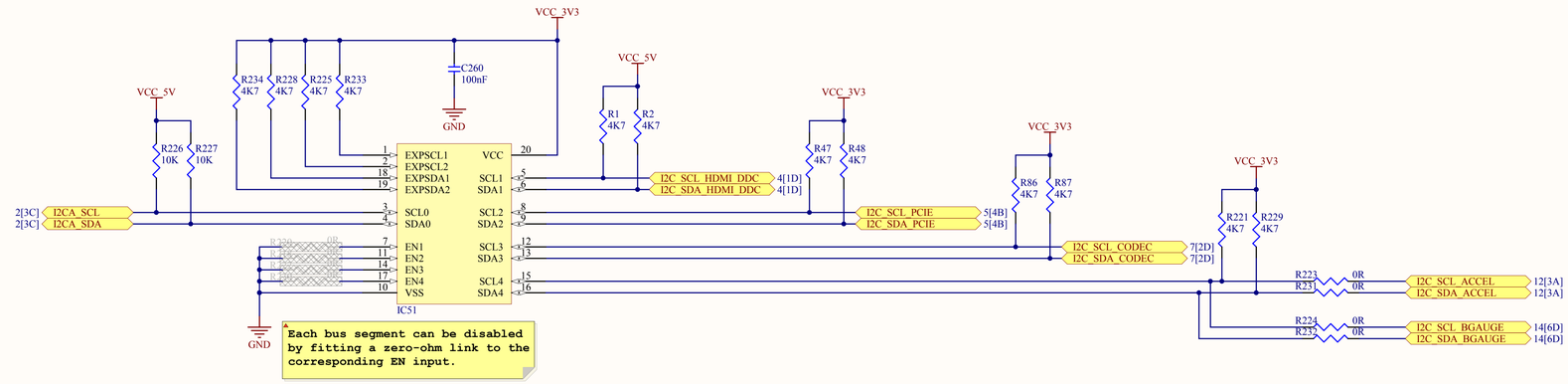

BUS MASTERS

SLAVE DEVICES

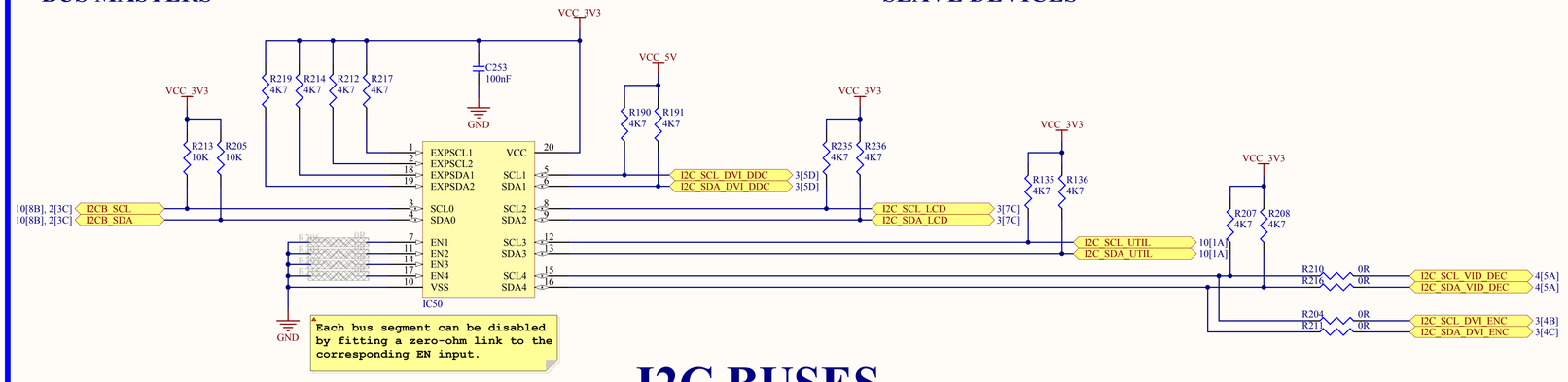

I2C BUSES

Blue Chip Technology

Design: HB3 (Host board for RMx modules)	
SheetTitle: I2C	Drawn by: DJC
Document No: 1981-1327	Revision: 1
Date: 18/10/2013	Sheet: 11 of 14
File Name: 11 - I2C.SchDoc	

Copyright Blue Chip Technology Ltd 2013

MISCELLANEOUS

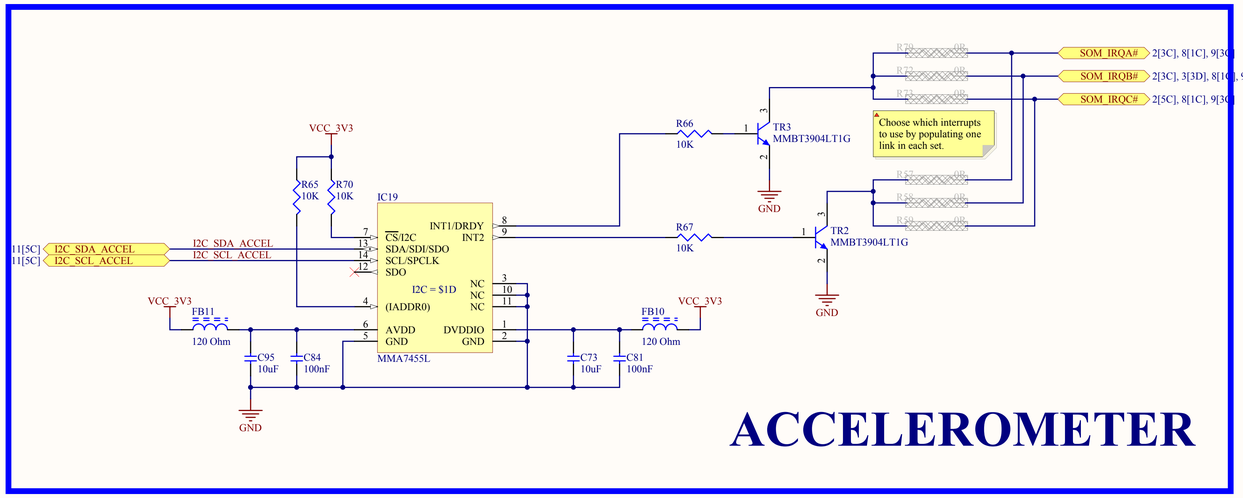

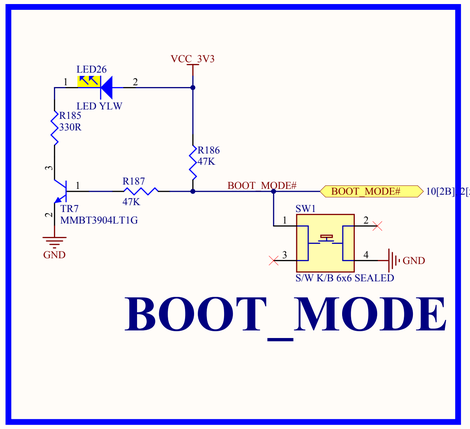

TEST POINTS

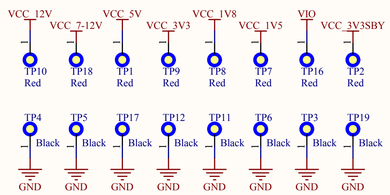

Place GND pins all over the board

ANALOGUE I/O

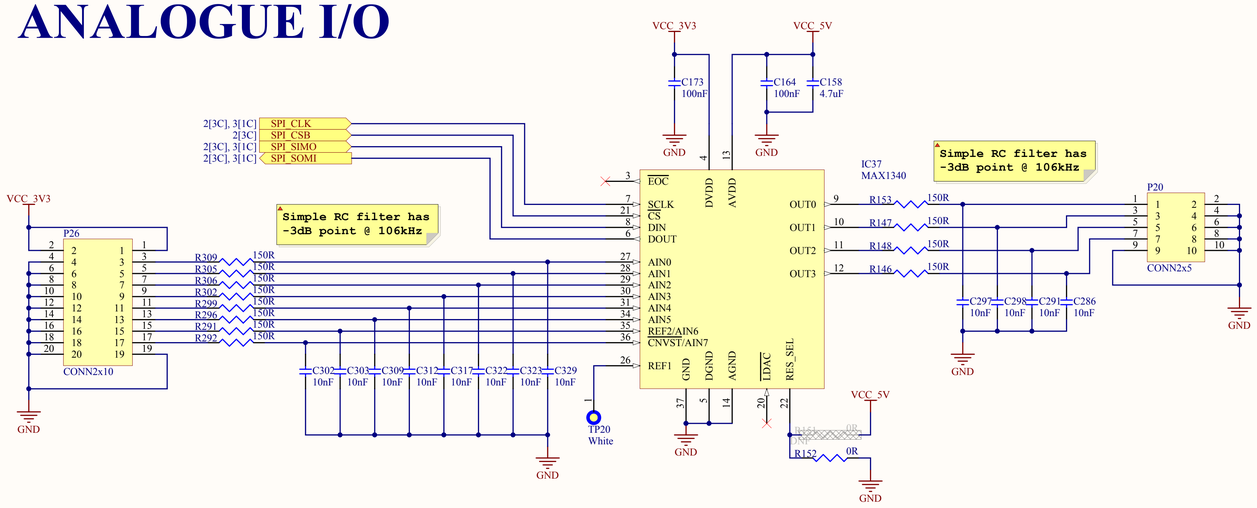

ZIGBEE

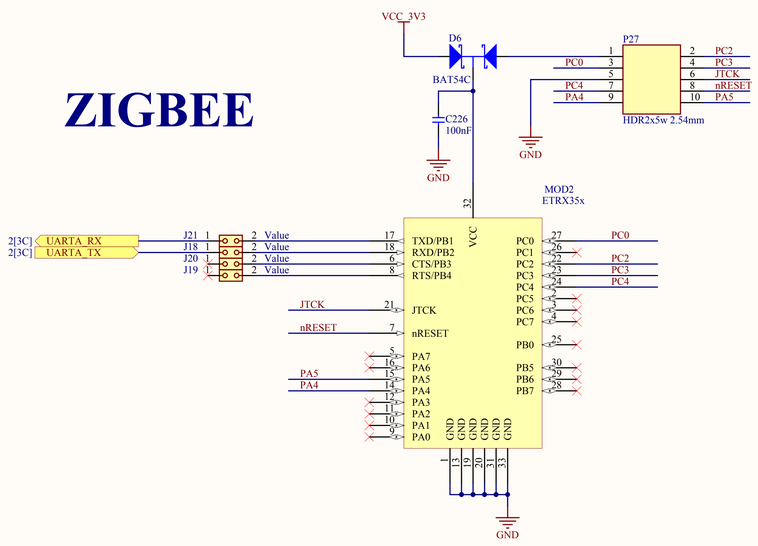

CAN bus

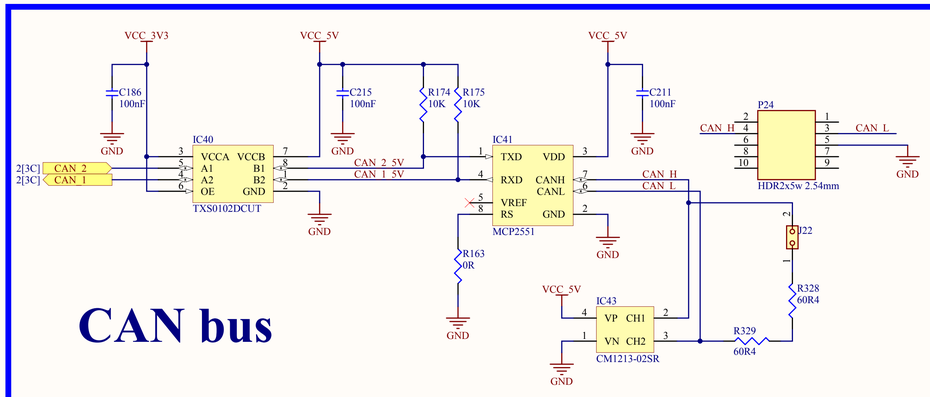

Unused Signals

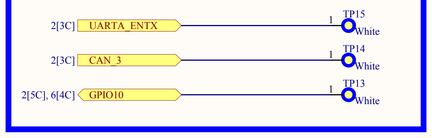

Blue Chip Technology

Design: HB3 (Host board for RMx modules)	
SheetTitle: Misc	Drawn by: DJC
Document No: 1981-1327	Revision: 1
Date: 18/10/2013	Sheet: 12 of 14
File Name: 12 - Misc.SchDoc	

Copyright Blue Chip Technology Ltd 2013

Power over Ethernet

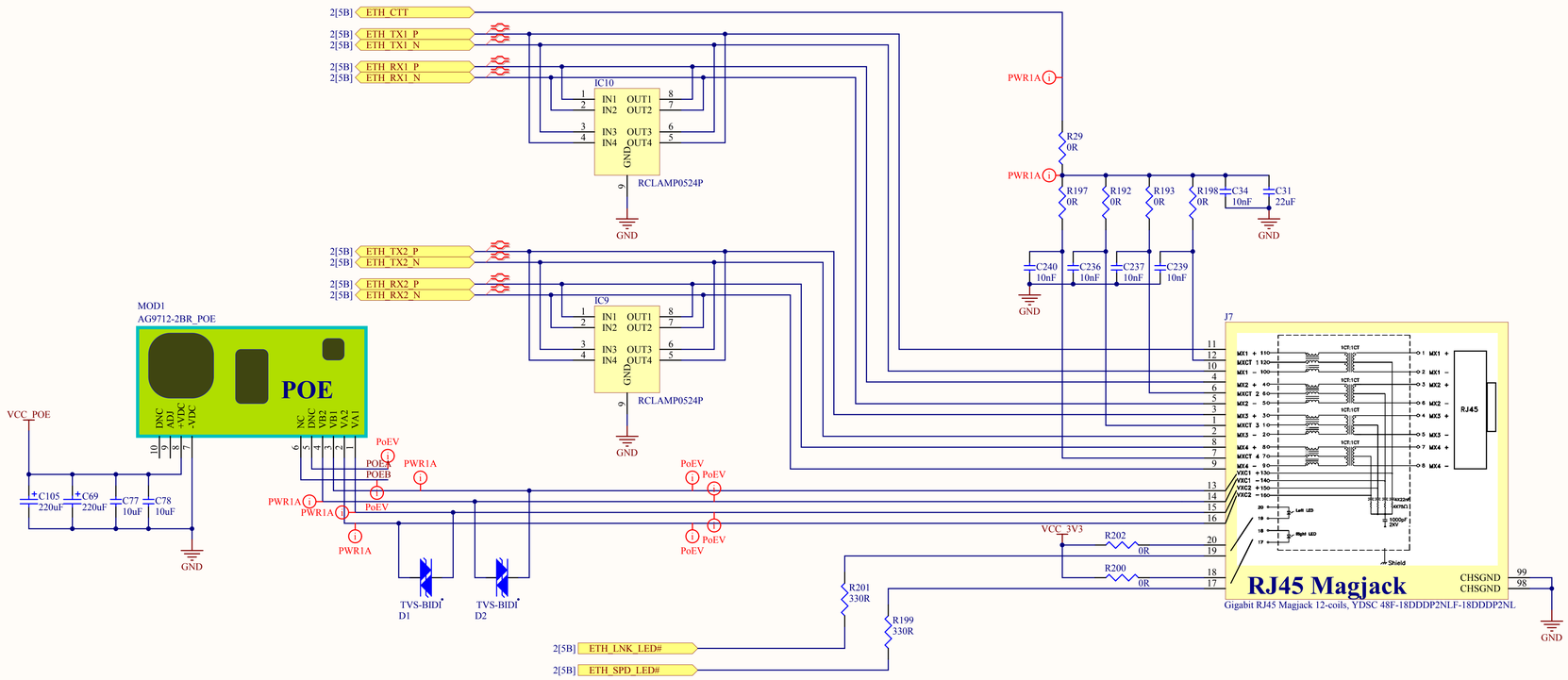

Blue Chip Technology

Design: HB3 (Host Board for RMx modules)	
SheetTitle: PoE	Drawn by: DJC
Document No: 1981-1327	Revision: 1
Date: 18/10/2013	Sheet: 13 of 14
File Name: 13 - PoE.SchDoc	

Copyright Blue Chip Technology Ltd 2013

Battery Charger / Switch

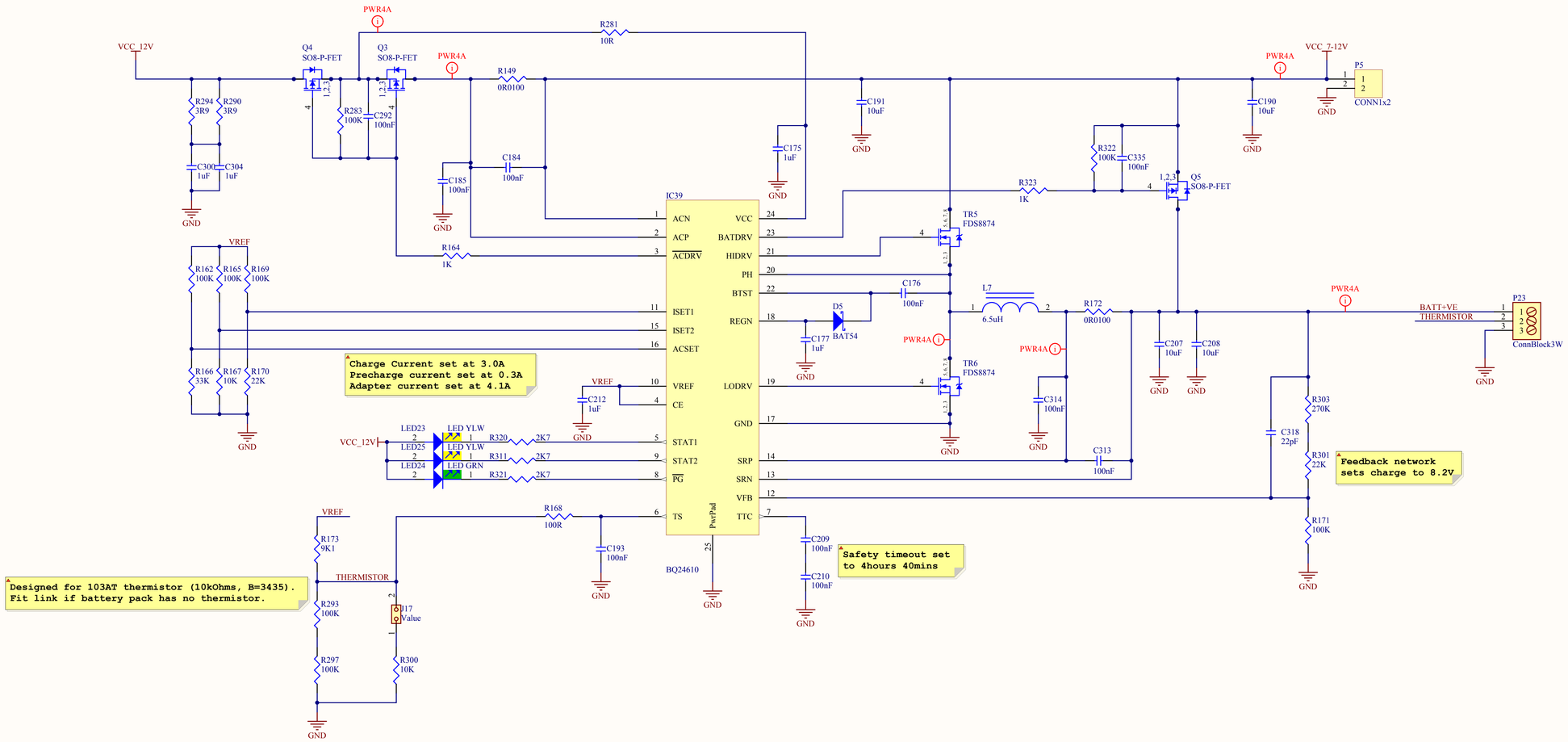

BATTERY GAUGE

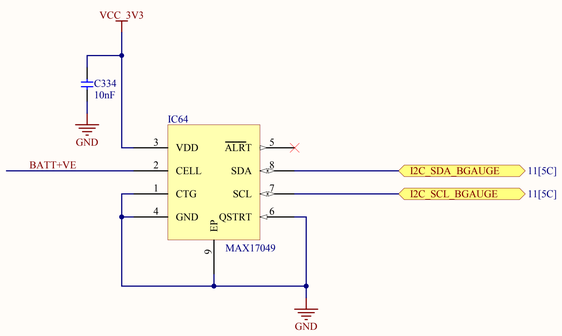

Blue Chip Technology

Design: HB3 (Host Board for RMx modules)	
SheetTitle: Battery	Drawn by: DJC
Document No: 1981-1327	Revision: 1
Date: 18/10/2013	Sheet: 14 of 14
File Name: 14 - Battery.SchDoc	

Copyright Blue Chip Technology Ltd 2013